2FHD0220 Data Sheet

Abstract

2FHD0220 series driver is a high-performance, dual-channel SiC gate driver developed in-house by Firstack based on ASIC platform, supporting single modules up to 2000V in the SiC 62mm housing module with configurable gate voltage. The driver supports up to 2W output per channel and is suitable for high power density application by using SiC module.

Core Features:

- Support 2W per channel
- Support up to 2000V SiC module
- Short-circuit protection(soft shut down)
- Miller clamping
- Configurable drive voltage
- Intelligent fault feedback
- UVLO

Typical Application:

- ESS
- Rail
- Motor drives

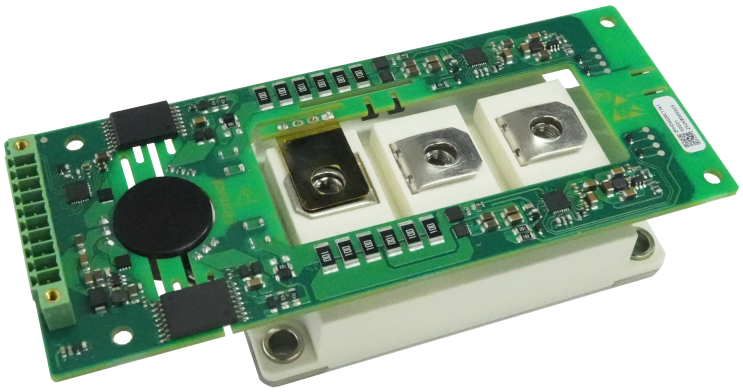

Fig. 1 2FHD0220

Functional Block Diagram

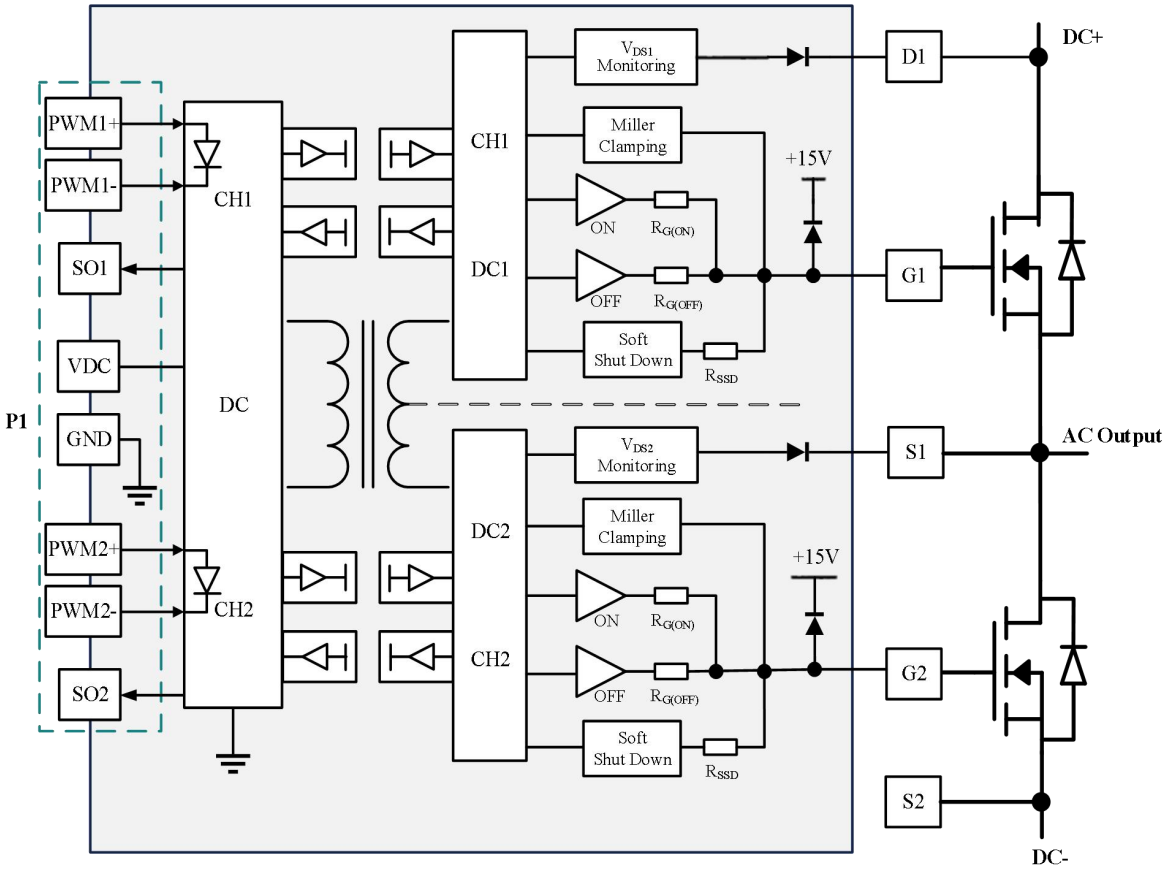

Fig. 2 Functional block diagram

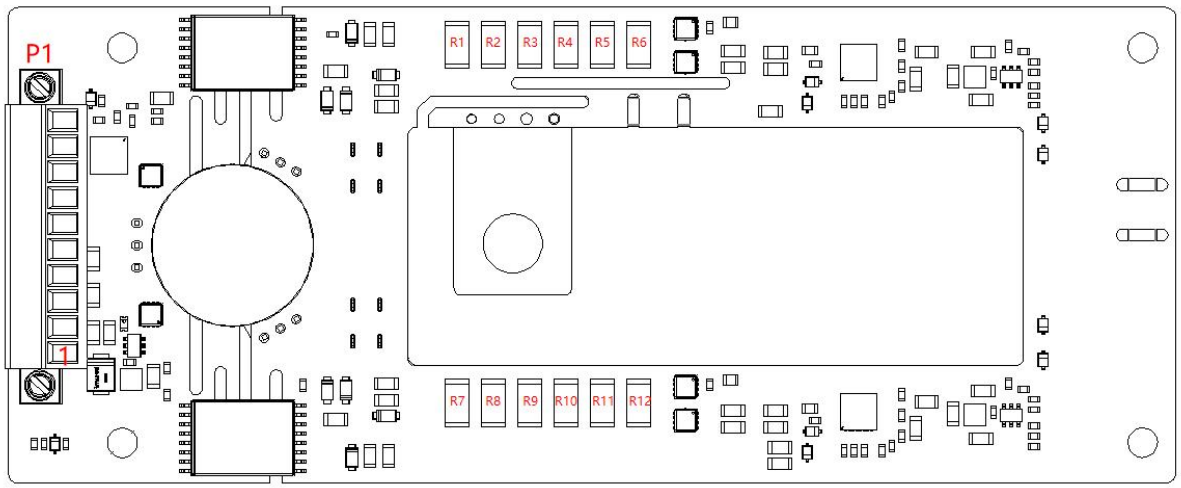

Fig.3 Connector interface location

Resistors Replacement Instructions

Position	Definition
R1,R2,R3 & R7,R8,R9	ON
R4,R5,R6 & R10,R11,R12	Off

Installation

2FHD0220 has specific requirements for busbar design during installation. It is recommended that the distance between the busbar and the power terminals of the 62mm module be >10mm to ensure no interference between the busbar and the driver.

Connector Interface Definition

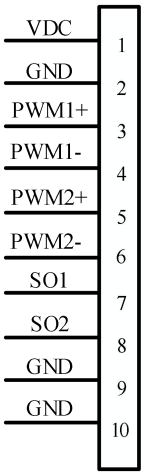

P1 terminal pin designation

Pin	Definition	Function
1	V_{DC}	Power supply input
2	GND	Primary side ground
3	PWM1+	Differential Input 1+
4	PWM1-	Differential Input 1-
5	PWM2+	Differential Input 2+
6	PWM2-	Differential Input 2-
7	SO1	Status output channel 1
8	SO2	Signal output channel 2
9	GND	Primary side ground
10	GND	Primary side ground

Technical Parameters

Absolute Maximum Ratings

Parameter	Remarks	Min	Max	Unit
Supply voltage V_{DC}	V_{DC} to GND	0	15.5	V
Gate peak current	@85℃	-20	20	A
Output power per channel	@50℃		2	W
	@85℃		1	W
Test voltage (50Hz/1min)	Primary to secondary side	6000		V_{RMS}
Operating temperature		-40	85	℃
Storage temperature		-40	85	℃

Recommended Operating Conditions

Parameter	Remarks	Min	Typ	Max	Unit
Supply voltage V_{DC}	V_{DC} to GND	14.5	15	15.5	V
Supply current I_{DC}	Without load		0.18		A
Primary side undervoltage threshold			12		V
Secondary side undervoltage threshold	Secondary side positive voltage		12.5		V

Gate Driver Parameters

Output voltage	Remarks	Min	Typ	Max	Unit
Total gate voltage	Turn on (ON) - off (OFF) voltage	20	25	25.5	V
Gate positive voltage V_{GSon}	Turn on (ON)	15	20	20.5	V
Gate negative voltage V_{GSoff}	Turn off (OFF)	-9.5	-5	-0.5	V

Logic Inputs & Outputs

Parameter	Remarks	Min	Typ	Max	Unit
Input PWM+ to PWM-		15.5	15	15.5	V
Turn on threshold PWM+ to PWM-	Note 1	8			V
Turn off threshold PWM+ to PWM-				4.5	V
Fault output SOx	Protection state @Io<10mA	0.35		V_{DC}	V
MOD mode	Direct mode	Set by software, no configuration required			
	Half-bridge mode	Set by software, no configuration required			

Short-circuit protection

Parameter	Remarks	Min	Typ	Max	Unit
V_{DS} monitoring threshold	Short-circuit protection monitoring	Configurable	11	Configurable	V
Response time	CH1, Note 2	Configurable	1.5	Configurable	µs
	CH2, Note 2	Configurable	1.5	Configurable	µs
Soft shut down time	Soft shut down action time	Configurable	4.16	Configurable	µs

Miller Clamping

Parameter	Remarks	Min	Typ	Max	Unit
Time from drive signal turn-off to clamp turn-on		Configurable	1.04	Configurable	µs
Clamp voltage			V_{SS}		V

Timing Characteristics

Parameter	Remarks	Min	Typ	Max	Unit
Turn-on delay	Note 3		850		ns
Turn-off delay	Note 4		850		ns
Rise time	Note 5		10		ns
Fall time	Note 6		10		ns
Fault blocking time			78		µs

Fault return time	Note 7		10		ms

Electrical Isolation

Parameter	Remarks	Min	Typ	Max	Unit
Creepage distance	Primary to secondary side, Note 8		22		mm
	Secondary to secondary side, Note 8		12.5		mm
Clearance distance	Primary to secondary side		12		mm
	Secondary to secondary side		5.5		mm

Unless otherwise specified, all data are based on tests at +25°C ambient temperature and V_{DC}=15V.

Note:

1. Primary side input：both differential and single ended PWM signals are possible as input

   ①Differential input voltage between PWM+ and PWM- ±15V typical, active high

   ②Single-ended input PWM- is grounded, voltage between PWM+ and PWM- typical +15V, PWM+ active high
2. Response time: the time from the occurrence of the fault to the start of soft shut down;
3. Turn-on delay: the time required to transmit the rising edge of the PWM signal input from the primary side to the rising edge of the secondary side of the gate driver;
4. Turn-off delay: the time required to transmit the falling edge of the PWM signal input from the primary side to the falling edge of the secondary side of the gate driver;
5. Rise time: the amount of time from 10% of the gate turn-off voltage to 90% of the gate turn-on voltage;
6. Fall time: the amount of time from 90% of the gate turn-on voltage to 10% of the gate turn-off voltage;
7. Fault return time: short-circuit 10ms, secondary side undervoltage 20ms, primary side undervoltage 40ms;
8. Creepage distance: refer to IEC61800-5-1-2007, to meet the basic insulation requirements of 2km or less above sea level and pollution level 2; the value is taken as the creepage distance of the isolation device.

3D and Mechanical Dimensions

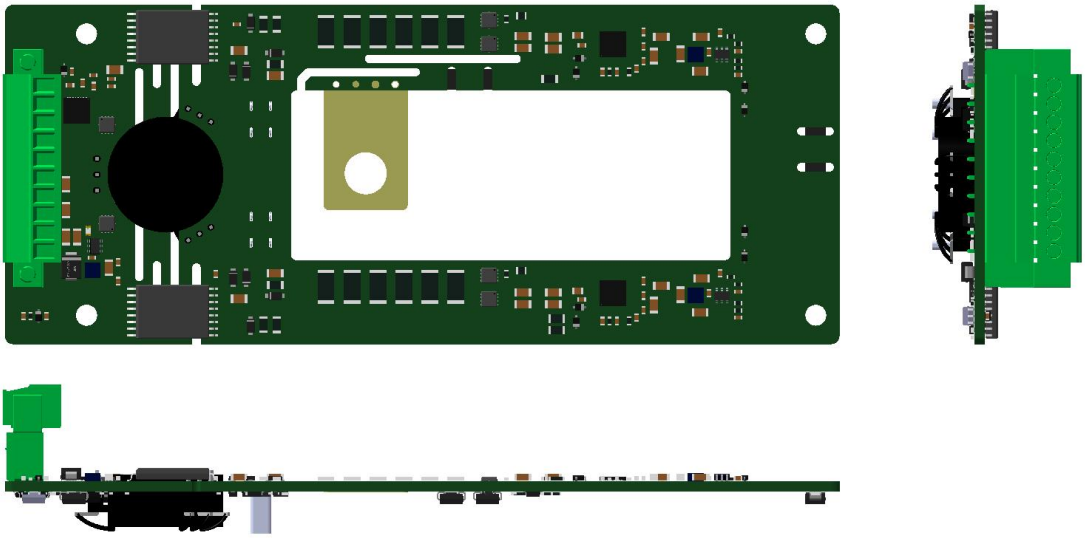

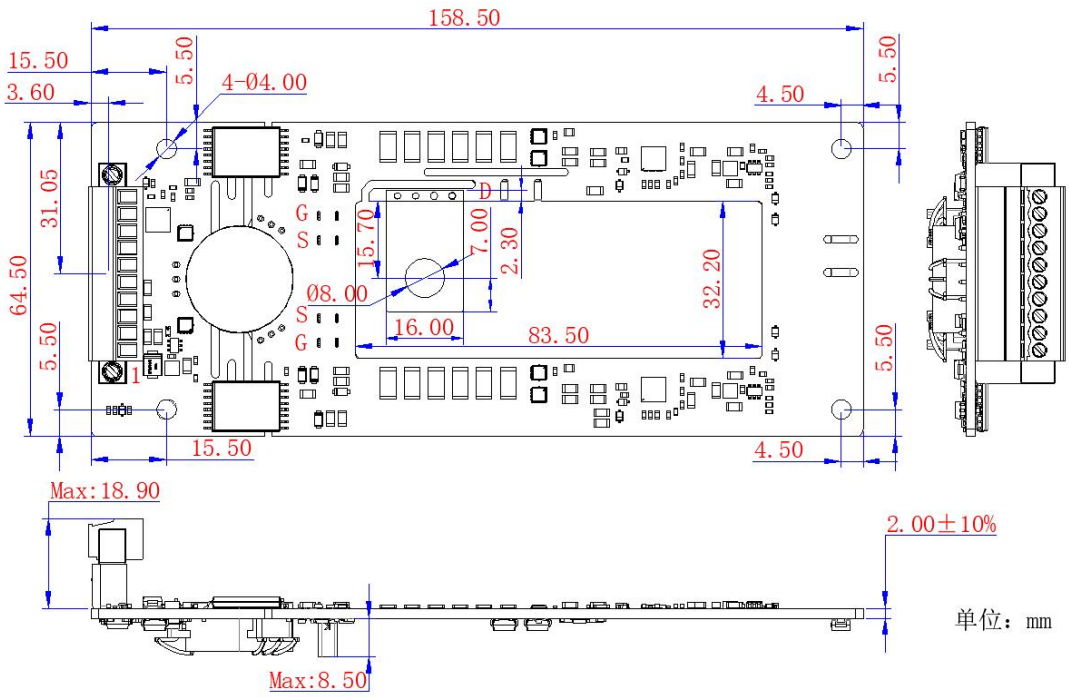

Note: 1. The thickness tolerance of the board is ±10%;

2. Other dimensional tolerances refer to GB/T1804-m.

Fig.4 3D Mechanical Dimensions

Updates

Date	Description	Version
2025.06.17	Official Version	V1.0
2025.07.24	Product Picture Update	V1.1
2025.12.11	Add installation note	V1.2

Ordering Information

2FHD0220 can support different part number of modules from multiple manufacturers. When purchasing, please add the module part number after the driver model number so that we can provide the driver that best meets your needs.

Part Number	Voltage	V_{GS}	R_{GON}（Ω）	R_{GOFF}（Ω）	Coating
2FHD0220C17A1-S0001	2000V	+20V/-5V	10//10//10	10//10//10	NO

Technical Support

Firstack's professional team will provide you with business consultation, technical support, product selection, price, lead time and other related information, and guarantee to answer your questions within 48 hours.

Legal Disclaimer

The instruction manual provides a detailed description of the product but does not commit to providing specific parameters regarding the delivery, performance, or applicability of the product. This document does not offer any express or implied warranties or guarantees.

Firstack reserves the right to modify technical data and product specifications at any time without prior notice. The general delivery terms and conditions of Firstack apply.

Contact Information

Tel: +86-571 8817 2737

Fax: +86-571 8817 3973

Website: www.firstack.com

Email: fsales@firstack.com

Address: 4-5/F, Building/5, Xizi Wisdom Industrial Park, No.1279 Tongxie Road, Hangzhou, China